PIPELINE

AMERICAN-MARSH PUMPS

"DURABILITY BY DESIGN SINCE 1873"

SUMMER 2015

The American-Marsh Pumps PIPELINE is a quarterly publication for our distributors and representatives. Its mission is to provide useful product information and company communication.

INSIDE THIS ISSUE:

The PIPELINE is Back!

Welcome to the NEW American-Marsh Pumps PIPELINE newsletter. After a three-and-a-half year absence, the PIPELINE returns with a fresh, new look and format.

Each issue of the quarterly newsletter will feature company updates on product development, new programs, company events, upcoming training schools and trade shows, American-Marsh projects worldwide, new employees and much more.

Since the last published issue of the PIPELINE, American-Marsh has experienced unprecendent growth and production. New products have been developed and employment numbers have increased, while the use of our products has spread all over the world.

Big things are happening at American-Marsh Pumps and we are excited about the positive direction the company is going. The PIPELINE is just another way to communicate the progress we are making company-wide.

We hope you find the PIPELINE newsletter a valuable resource.

Do you have any PIPELINE feedback? Comments? Article ideas?
Contact Jason Redd at Jason.Redd@american-marsh.com

FOR INTERNAL USE ONLY

Project Focus: El Dorado International Airport (Bogotá, Colombia)

By Pietro Pilo

American-Marsh Pumps has teamed up with the El Dorado International Airport in the $1 billion modernization and expansion of its state-of-the-art International Wing.

Located in Bogotá, Colombia, El Dorado International Airport is the country's premier airport and ranks among the 50 busiest flight hubs in the world. Equipped with the world's third-largest landing field, El Dorado accounts for 49% of the country's total air traffic. It is Latin America's largest cargo airport, hauling over 635,000 metric tons per year. It also ranks third in Latin America in total passenger traffic.

The major renovation project, announced in 2007, was aimed at minimizing airport congestion while increasing passenger capacity and accomodating additional flights. An essential piece of the airport face-lift consists of the implementation of a fire protection system in the new wing that accommodates over 27 million passengers per year. The fire system features two Series 500 HD UL/FM pumps that will cover 29,527 square meters with ultimate protection. The pumps are a 5x6-15 diesel 275 HP and a 5x6-11 electric 200 HP. These two pumps demonstrate the versatility of American-Marsh pumps and their ability to work with different driver options. In case of a power outage, the diesel system will start working, ensuring the safety of the airport's passengers and employees. In addition to versatility, this system proves American-Marsh products to be trustworthy in every condition.

The airport has seen a 2.5 million passenger increase in each of the last two years.

Although pumps are already installed the project is still under construction.

Pictured below are American-Marsh Pump's two Series 500 HD UL/FM fire pumps that have been installed in El Dorado International Airport in Bogotá, Colombia.

The installation of two American-Marsh Pumps fire systems is a significant part of the El Dorado International Airport's $1B modernization project.

Product Development Highlight: SD Discharge Heads

By Terry Kerbough

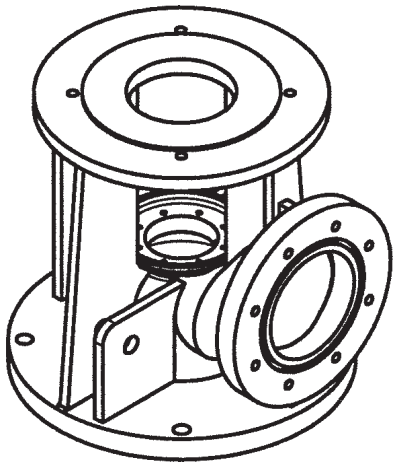

American-Marsh Pump's newly designed SuperDuty (SD) discharge head's construction and capabilities make it an industry leader.

One of the latest additions in American-Marsh Pumps product line is the recently designed "SuperDuty" (SD) discharge head.

The SD discharge head is based off of the time proven HD discharge but has been significantly redesigned for even more aggressive applications. These design changes include ductile iron construction, increasing pressure limitations and hanging weight—two very important criteria when dealing with very deep pump settings.

BENEFITS OF THE SD DISCHARGE HEAD

The SD discharge head offers offers American-Marsh's customers unique and specifically features not found anywhere else.

1. Twice the strength of cast iron, the ductile iron construction gives the SD head's higher pressure ratings, higher hanging weight and an easier dual lifting pin design.

2. The SD discharge head's ductile iron construction and higher strength lifting pins allow it to be set to depths exceeding 1000 feet, based on construction options.

3. The SD discharge head is available in 8", 10" and 12" sizes.

4. The American-Marsh Pump's SD discharge head's hanging weights are a game changer for the water well industry.

5. 5. The redesigned high ring base allows for a lot of flexibility when determining how shafts are assembled (and disassembled) into your deepset application. The high ring base also allows for ample room for packing, mechanical seals and tension tube assemblies giving the end user the most flexibility in the field.

AMERICAN-MARSH PUMPS

WORD SEARCH

H	M	T	P	S	A	P	A	T	D	I	C	K	E	Y
I	A	E	H	H	P	V	U	Z	R	P	L	Z	L	Q
Z	R	R	I	A	G	Q	M	M	P	F	A	T	B	H
U	K	R	L	N	Z	M	R	I	Y	M	Y	E	O	F
D	F	Y	H	E	C	X	O	K	J	O	W	S	N	R
H	A	K	O	W	Y	I	N	E	O	N	I	Y	N	E
L	R	E	U	R	Y	T	C	F	E	O	L	E	I	M
H	R	R	S	I	M	D	H	L	V	S	L	L	E	P
I	I	B	T	G	O	P	E	O	I	D	I	N	A	G
E	S	O	O	H	N	G	E	R	R	O	A	O	L	C
Z	Q	U	N	T	M	Q	K	I	E	D	M	C	L	T
J	K	G	V	N	F	S	O	O	S	N	S	B	M	N
A	H	H	K	T	I	P	U	R	G	A	V	O	A	J
J	L	L	E	H	C	S	D	D	O	T	F	B	N	X
K	R	J	A	Y	A	D	K	I	N	S	I	W	V	R

BOBCONLEY
BONNIEALLMAN
CLAYWILLIAMS
HARLEYTHORDSON
JAYADKINS
JOEVIRES
MARKFARRIS
MIKEFLORIO
PATDICKEY
PHILHOUSTON
RONCHEEK
SHANEWRIGHT
STANDODSON
TERRYKERBOUGH
TODDSCHELL

American-Marsh University: Importance of Seal Selection

By Shane Wright

Selecting the proper seal for a pump can be just as important as selecting the correct pump for an application. Many variables must be taken into consideration.

1. The seal must physically fit into the pump. This can be determined by comparing the seal dimensions with the pump's seal chamber and shaft sleeve dimensions.

2. The seal must be able to operate at the fluid temperature and lubricity. These limits can be found in the specifications of the seal.

3. The seal material must be chemically compatible with the fluid pumped. There are many chemical compatibility charts available for this selection process.

4. The seal must be rated to withstand the pressure in the pump's seal chamber. The pressure requirements for a seal are in the seal specifications, but the seal chamber pressure is determined based on the style pump.

In a vertical turbine pump, the stuffing box pressure is equal to the discharge pressure of the pump minus any friction loss in the column between the top bowl and discharge head. While in a double suction split case pump, the stuffing box pressures are equal to the suction pressure entering the pump. On multistage split case pumps the first stage seal chamber is equal to suction pressure and the second stage box is equal to suction pressure plus the pressure developed by the first stage impeller only. In an end suction pump there are two main options. If the impeller is equipped with back pump out vanes the seal chamber pressure will be the suction pressure plus 25% of the discharge pressure. If the impeller has a rear wear ring and balancing holes, the sseal chamber pressure will be the suction pressure plus only 10% of the discharge pressure. OSD & OSG ANSI pumps are assumed to have back pump out vanes. However, the RE product line can be supplied in multiple configurations. This can be determined by referring to the engineering information sheet for a particular size pump.

2015 Upcoming Events, Training Schools & Trade Shows

Training schools and trade shows allow American-Marsh Pumps some of the most efficient means of educating our distributors. To allow for intensive distributor training, American-Marsh offers a training school every six to eight weeks. These training schools cover product features and benefits, competition, market overview, catalog familiarity, AMPNET and Water Works software operation.

To cover specific markets and allow end user interaction with our products, American-Marsh Pumps participates in several market specific trade shows. These trade shows cover the agricultural, commercial, municipal, industrial, mining and governmental markets.

2015 Sales School Schedule

Memphis, Tennessee, USA
November 11-12, 2015

2015 Trade Show Schedule

Water Environment Federation Technical Exhibition & Conference (WEFTEC) 2015
September 26-30, 2015
McCormick Place
Chicago, Illinois

2015 California Groundwater Association (CGA) Annual Convention & Trade Show
October 14-15, 2015
Grand Sierra Resort
Reno, Nevada

International Association of Amusement Parks & Attractions Expo 2015 (IAAPA)
November 16-20, 2015
Orange County Convention Center
Orlando, Florida

National Groundwater Association Expo 2015
December 15-17, 2015
Las Vegas Convention Center
Las Vegas, Nevada

American-Marsh Picnic 2015 Recap: AMP Celebrates at Memphis Zoo

By Bonnie Allman

American-Marsh Pump's Summer Event was held on Saturday, May 16, 2015 at the Memphis Zoo.

We had a wonderful turnout — over 100 employees and family — even though the weather did not cooperate 100%. The day started with thunderstorms, but luckily they skies cleared up long enough for us to have our luncheon at the Primate Pavilion from Noon to 2 p.m. with awesome door prizes, socializing and great food. Feedback on our event was that everyone had a fantastic time and want to go back next year.

Thank you to all who were able to attend!

An even bigger "THANKS!" to the American-Marsh planning committee of Bonnie Allman, Anita Greene, Deb Lamar, Denise Person and Brandy Suggs for their tireless work to organize all arrangements for the big day. We appreiciate your hard work!

THANK YOU & GREAT JOB!

Getting to Know You: A Q&A with Joe Vires, Director of Operations

1. How long have you been at American-Marsh Pumps?
I've worked at American-Marsh Pumps for 20 years.

2. What was your previous role/ work experience prior to this position?
Prior to taking over as the Director of Operations, I was the Plant Manager/Purchasing Manager.

3. What is your hobby?
Fishing

4. If you could go back in time, what year would you travel to and why?
I would go back to September 10, 2001. I would make a call.

5. What is your biggest success up until now?
Raising two awesome kids!

6. What do you like most about working at American-Marsh Pumps?
The thing I enjoy the most about American-Marsh Pumps is the family atmosphere.

7. As a kid, what did you want to be when you grew up?
When I was a kid I wanted to be a photographer.

8. What sports team do you follow and why?
As most people know, I'm a die hard Florida Gators fan! Because, "If you ain't a Gator, you're Gator bait!"

From the Archive: Type MXF Fire Pump

The American-Marsh Type MXF Portable Centrifugal Fire Pump was the first pump of its kind to fill the longtime need for a portable fire pump that could handle a capacity larger than 50 GPM.

Low in both initial cost and operating cost, the Type MXF was a centrifugal type pump, the same as American-Marsh's well-known line of Barton-American Fire Pumps.

In addition to being able to handle up to 200 GPM, the Type MXF showcased other features to make it one of the top pumps of its day. It handled dirty water without causing excessive wear on rotating parts and could take water from hydrants, wells, cisterns or nearby streams. It used American-Marsh's patented exhaust type primer to automatically prime in 15-20 seconds on a vertical lift as high as 20'. No foot valve was required to operate the Type MXF. Users could put the suction hose in the water supply and start pumping.

American-Marsh supported the American-Barton fire pump line until selling it off in the 1960's. American-Marsh re-entered the fire protection industry in 2007 when we began product development on our newly released UL/FM offering that continues to expand to this day. End suction, vertical in-line, split case and vertical turbines complete the American-Marsh Fire Protection product offering.

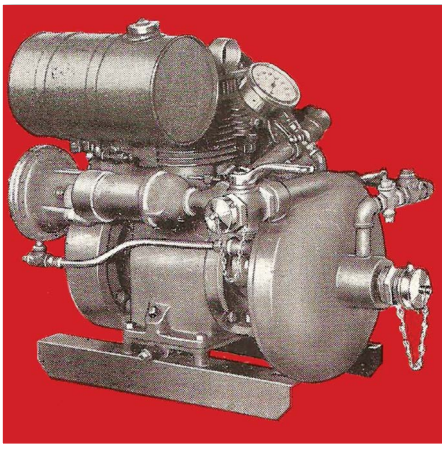

The **Type XF, Portable Fire Pump** (shown above) weighed 125 pounds. It was a self-priming pump with a capacity up to 70 GPM and generate pressures up to 125 PSI.

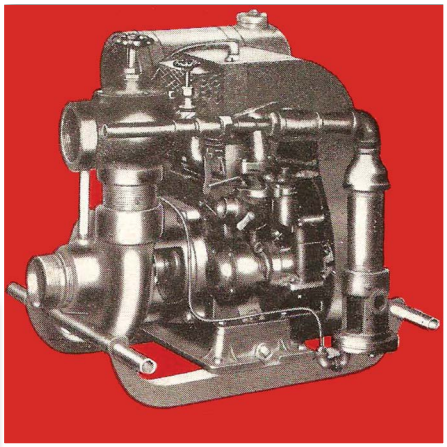

The **Type X, Booster Tank Filler** was also portable and featured a quick self-priming system with vacuum primer. Sizes ranged up to 1,000 GPM.

On the Inside: 2015 New Hires

Through 2nd quarter

Name	Month	Location
Alexander Baker	January	Collierville
Stacy Borden	May	Collierville
Butas Dhillon	March	Fresno
Jerriel Edwards	May	Collierville
James Graham	March	Collierville
Joseph Houston	January	Collierville
Cody Jones	May	Collierville
Vaughn Kugle	May	Collierville
Tommy Lenahan	February	Collierville
Mary Lowe	April	Collierville
Kim Stevens	January	Hastings Sales
Eric Toledo	May	Collierville
Mark Van Dyke	January	Lakeland Sales
Richard VonStaden	January	Collierville
Gregory Williams	March	Collierville

New Programs:
A-B-C Trim Selection Program

By Terry Kerbough

intelliquip

Move at the **Speed of Sales**™

American-Marsh Pumps recently released the A-B-C Trim Selection Progam (in intelliquip)—a completely new stock-and-build program for submersible pump distributors and large contractors. This program will have multiple benefits that will make pump construction (for all submersible turbine pumps 15' and shorter in length) a more time and cost-efficient process.

COST EFFICIENCY

The current selection process allows the distributor to customize pump selection based on flow and pressure. However, to meet those specifications, impellers must be trimmed by lathes, increasing the overall cost of the pump assembly. The premise of AMP's new A-B-C Trim Selection Program is that stocking distributors will stock base impeller sizes and use a combination of those impeller trims to meet the desired design point in pump building process. Pre-trimmed impellers and cut-to-length shafts will allow customers to maintain a minimum level of inventory, while eliminating the need of an expensive lathe and machinist.

TIME EFFICIENCY

This pre-trim A-B-C manufacturing philosophy will not only cut costs but will also be a great time saver in the overall assembly process. AMP distributor's ability to stock impellers rather than trimming will will allow for faster pump assembly and delivery to the customer.

3-2-1 Extended Warranty Program

By Terry Kerbough

In addition to the new Submersible A-B-C Trim Selection Program, American-Marsh Pumps announced the implementation of it's 3-2-1 warranty program, program which is an upgrade from our standard one-year warranty. The 3-2-1 program offers the end-user two additional years of warranty coverage depending on the equipment purchased for a total of three years.

Designed to encourage the purchase of AMP products in a complete pump, motor and control panel package, the warranty program provides the consumer with multiple warranty options based on purchasing needs.

When a customer purchases a pump, motor and control panel, they will receive a three-year warranty. A two-year warranty will be provided to all customers who purchase the combination of a pump and motor. If a customer buys the pump end only, they will recieve a one-year warranty.

American-Marsh Pump's 3-2-1 warranty program guarantees the repair or replacement of the item in question for any defect in material or craftsmanship and for items being used for their intended design.

The warranty program does not cover parts damaged by decomposition from chemical action, corrosion, erosion or wear caused by abrasive materials, exessive water temperatures, electrolysis, cavitation or special materials used to prevent corrosion, erosion, electrolysis or cavitation nor does it cover damage resulting from misuse, accident, negligence, abuse, alteration, vandalism or from improper operation, maintenance, improper alignment, installation, modification or adjustment. Part's repaired outside of American-Marsh Pumps factory without written approval are not covered in the 3-2-1 Warranty Program.

3 YEAR WARRANTY — Standard 3-year warranty with the combined purchase of a pump, motor, and control panel.

2 YEAR WARRANTY — 2-year warranty with the purchase of a pump and motor.

1 YEAR WARRANTY — 1-year warranty with the purchase of a pump end only.

American-Marsh Pumps:
Over 140 Years of Tradition, History & Quality Manufacturing

American-Marsh Pumps, one of the oldest pump lines in America, are pump products steeped in heritage. Since 1873, the American-Marsh line of pumps have withstood the test of time. Over the last 140 years, over 100 varieties of pumps have been designed and built. From steam pumps to centrifugal pumps, American-Marsh pumps have been built to meet the ever-changing requirements of society. Over the last century, through continuous product development, more American-Marsh models have been retired than most other pump manufacturers have ever produced. Hundreds of thousands of pumps have been built, all designed with long life in mind, allowing many of them to last over 50 years in service.

Today, look to us for the complete offering of American-Marsh Pumps, consisting of 18 product lines to serve your every need. Whether your need is a self-priming diaphragm pump, a stainless steel vertical sump pump, or anything in between, American-Marsh Pumps will provide you with a durable, high-quality solution.

BUILD a world-class, quality product, and back it with knowledgeable customer service staff just as experienced and proven as our pumps.

TAKE a specialized product, and provide a simple process to obtain the information and delivery you require. Our heritage of quality pumps goes back to 1873 and continues today, emphasizing durability in the design and construction of every pump we make. American-Marsh Pumps, an American tradition since 1873.

Our entire product family reflects years of customer input, product upgrades, redesign and new product development...all focused on meeting and exceeding our customers expectations. For over 140 years, the American-Marsh Pump designs have proven their durability by withstanding the test of time. Our commitment to customer service and satisfaction will ensure that the American-Marsh Pumps Product line will be around for the next 140 years.

Original American Steam Pump Company location in Battle Creek, Michigan in 1909.

World Headquarters
American-Marsh Pumps
550 South Street
Collierville, TN 38017
Phone: (800) 888-7167
Fax: (901) 860-2323

Distribution Centers

Asia
North No. 8 Rd., West No. 1 Rd.
East Duty Free Warehouse, Area 2
Jiaozhou, Shandong Province
P.R. China
Phone: 86-532-82279297

Florida
2805 Badger Road
Lakeland, FL 33811
Phone: (800) 444-7167
Fax: (863) 646-5969

California
3269 East North Building D
Fresno, CA 93745
Phone: (800) 288-7167
Fax: (559) 485-8663

Nebraska
2599 South Cornhusker Ave.
Hastings, NE 68901
Phone: (800) 408-7167
Fax: (402) 461-4751